AerodyneResearch

Technology Enhancing Science

Compact GC-PTR

A compact, field-deployable TD-GC-PTR-TOF-MS for the in situ monitoring of volatile organic compounds (VOCs)

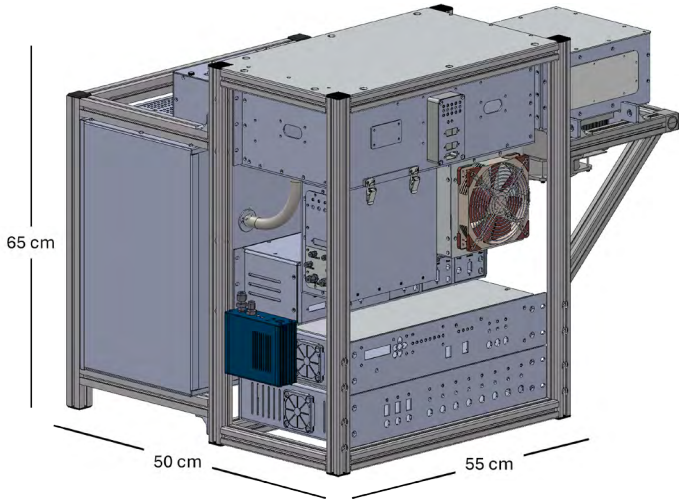

Online gas chromatograph (GC) system with integrated thermal desorption preconcentration coupled with a compact proton transfer reaction time-of-flight mass spectrometer

Applications

- Long-term monitoring of VOCs, including primary emissions and oxidation products.
- Quantitative detection of environmentally relevant biogenic and anthropogenic VOCs, including air toxics and ozone precursors.
- Mobile monitoring for detailed source characterization.

Data Analysis Software

Analysis software packages offer fully-autonomous, real-time processing of mass spectral and chromatographic data.

- **AuTofware** offers automated data pre-averaging, mass calibration, diagnostic capabilities, background and calibration corrections, and data export procedures.
- **AutoTERN** works seamlessly with AuTofware to provide automated chromatographic analysis of processed mass spectral data. AutoTERN includes automated retention time correction and chromatographic peak fitting.

Advantages

- Field-deployable. Compact, robust design makes advanced, research-grade measurements possible in challenging and remote environments.
- Fully automated switching between GC-PTR and direct-PTR measurements, providing automated acquisition of both online isomer-resolved data without sacrificing high time resolution detection.
- Innovative ionization cell provides exceptional sensitivity and acquisition speed without humidity dependence.
- GC thermal desorption preconcentration increases system sensitivity while the GC preseparation enhances compound resolution and aids interpretation of complex spectra.
- **Low detection limits:** < 1 - 5 ppt (10 min) GC-PTR; 50 ppt (1 min) direct-PTR detection. Compact footprint (50 x 65 x 55 cm). Low power (< 600 W typical).
- Fully automated analysis software provides real-time processing for a faster, more efficient data output.

Compact GC-PTR

Specifications

Weight, Size, Power

Weight: 70 kg
Volume: 0.2 m^3
Dimensions: 50 cm x 65 cm x 55 cm
Power: 500 W (typical); < 600 W (start-up)

	Compact PTR-TOF-MS	GC PTR-TOF-MS
Sensitivity (cps/ppb)	1,000	Enhanced by a factor of 300*
Mass Resolution	1,000	GC dimension of separation
Limit of Detection (ppt)	< 50 (1 min)	< 1 – 5 (speciated, 10 min)

* Due to preconcentration by the GC, enhancement by factor of 300 typical for a 1 L preconcentrated sample.

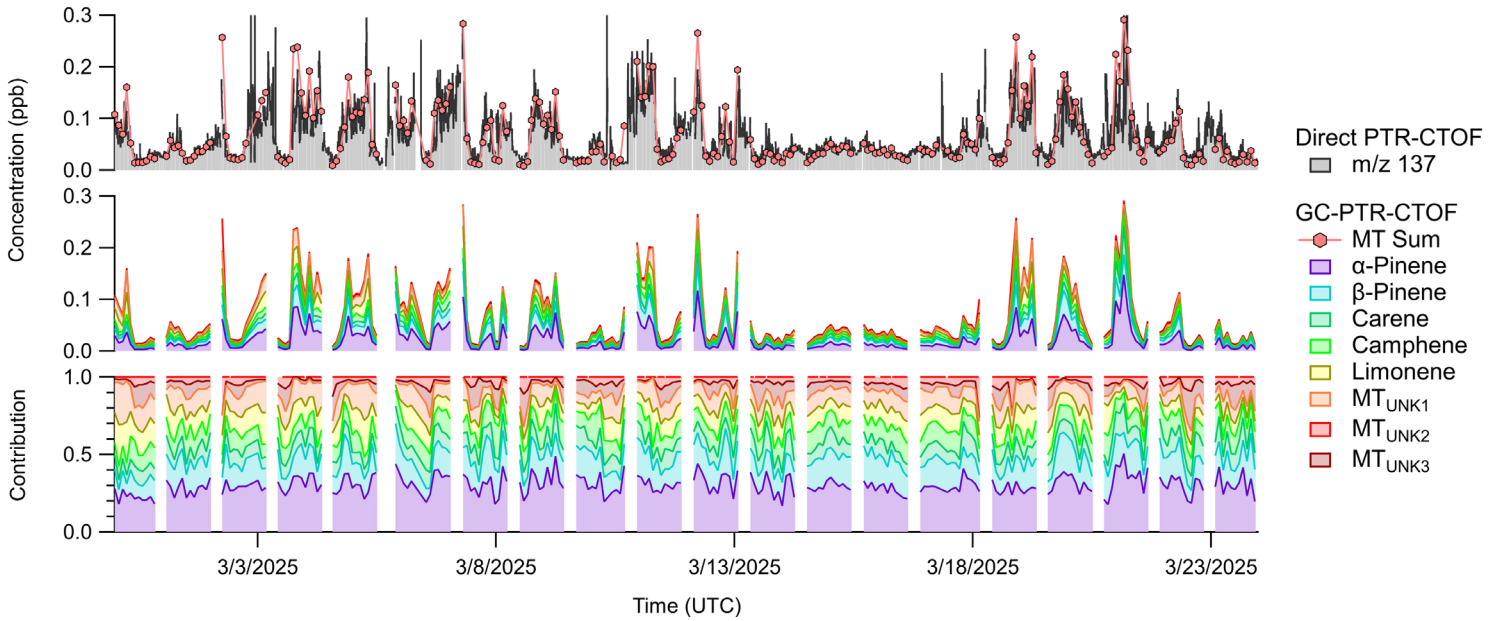

Exemplary data demonstrating > 4 weeks of unattended ambient measurements in Thun, Switzerland. Here we show the direct and speciated detection of monoterpenes.

The Compact TD-GC-PTR-TOF-MS offers both ***high-time resolution*** detection and ***chemical resolution*** via pseudo-continuous GC separation.

Aerodyne Research

45 Manning Road
Billerica, MA 01821
(978) 663–9500
www.aerodyne.com

CONTACT US